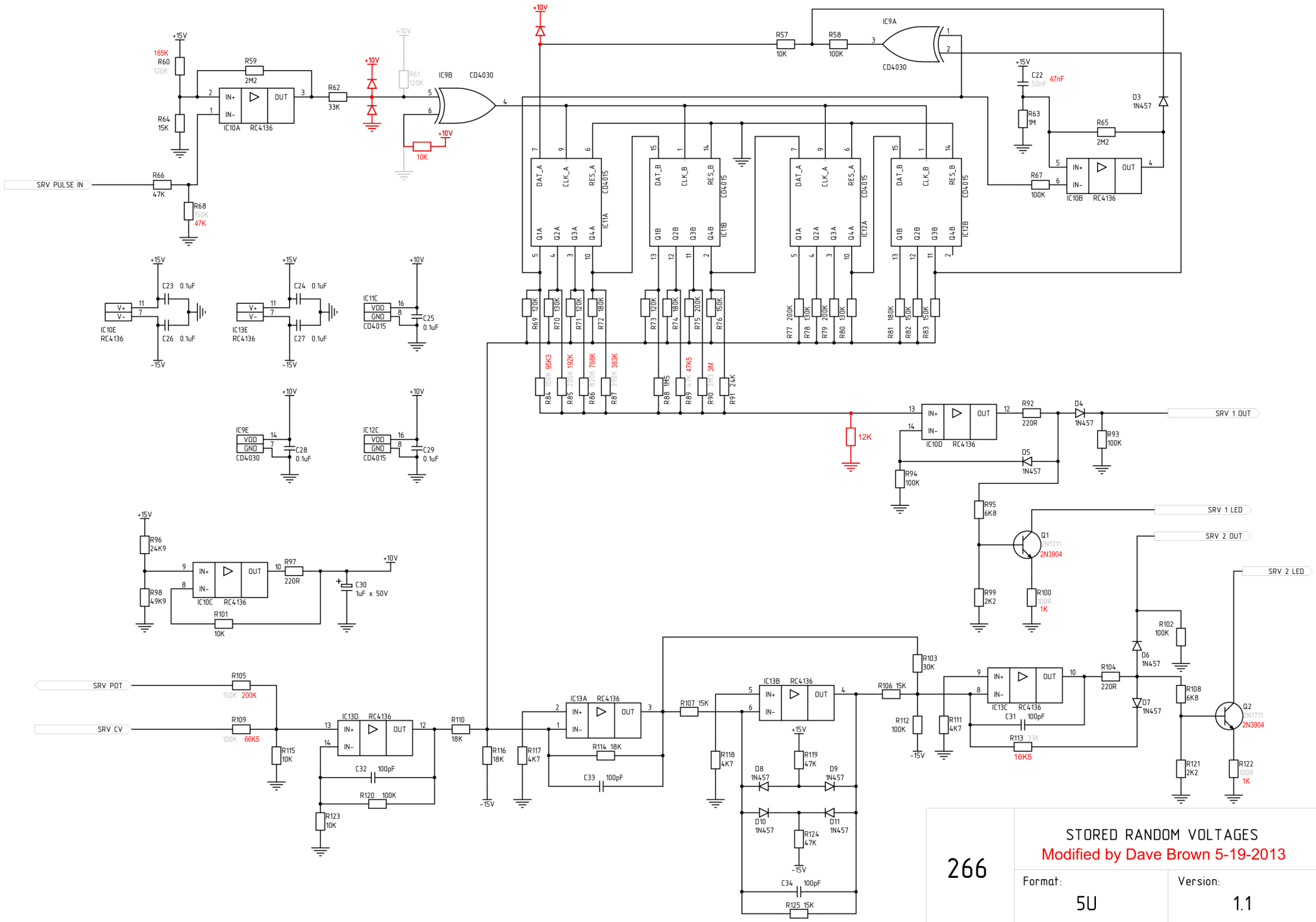
SRV PULSE IN
SRV 1 OUT
SRV 1 LED
SRV 2 OUT
SRV 2 LED
SRV POT
SRV CV
IC9A CD4030
IC9B CD4030
IC10A RC4136
IC10B RC4136
IC10C RC4136
IC10D RC4136
IC10E RC4136
IC11A CD4015
IC11B CD4015
IC11C CD4015
IC12A CD4015
IC12B CD4015
IC12C CD4015
IC13A RC4136
IC13B RC4136
IC13C RC4136
IC13D RC4136
IC13E RC4136
IC9E CD4030
Q1 2N3904
Q2 2N3904
266
STORED RANDOM VOLTAGES
Modified by Dave Brown 5-19-2013
Format:
5U
Version:
1.1